PART REV	DWG ISSUE	DATE	ECN NO.	APPVD BY	REL BY
–	–	06/16/16	UMI6001	T.POMBART	PER

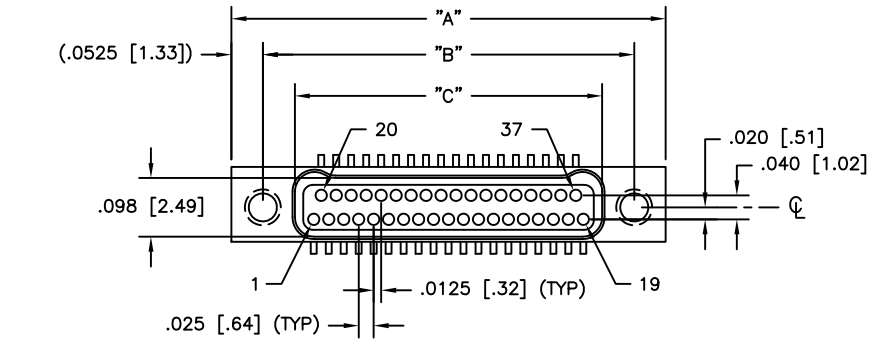

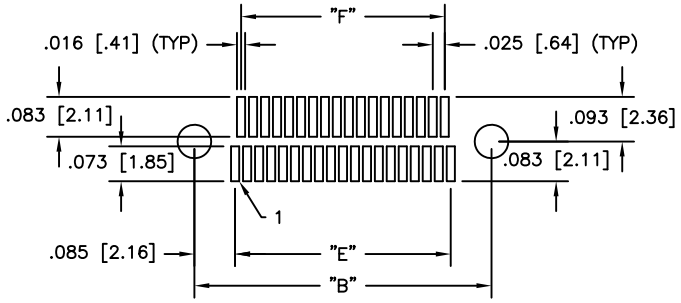

RECOMMENDED PC BOARD LAYOUT
(COMPONENT SIDE)
SCALE 4:1

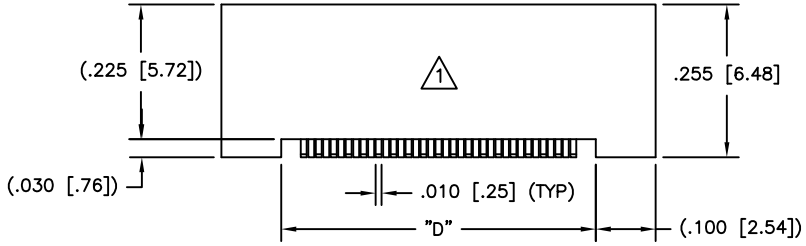

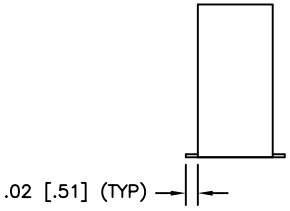

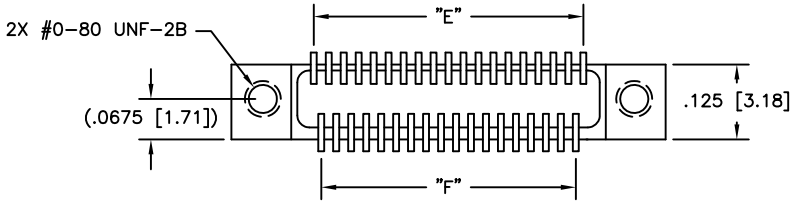

PART NO.	SIZE	"A"	"B"	"C"	"D"	"E"	"F"
432411327	9	.375 [9.52]	.270 [6.86]	.163 [4.06]	.175 [4.44]	.100 [2.54]	.075 [1.90]
432421327	15	.450 [11.43]	.345 [8.76]	.238 [5.97]	.250 [6.35]	.175 [4.44]	.150 [3.81]
432431327	21	.525 [13.33]	.420 [10.67]	.313 [7.87]	.325 [8.25]	.250 [6.35]	.225 [5.71]
432441327	25	.575 [14.60]	.470 [11.94]	.363 [9.14]	.375 [9.52]	.300 [7.62]	.275 [6.98]
432451327	31	.650 [16.51]	.545 [13.84]	.438 [11.05]	.450 [11.43]	.375 [9.52]	.350 [8.89]
432461327	37	.725 [18.41]	.620 [15.75]	.513 [12.95]	.525 [13.33]	.450 [11.43]	.425 [10.79]
432471327	51	.900 [22.86]	.795 [20.19]	.688 [17.40]	.700 [17.78]	.625 [15.87]	.600 [15.24]
432481327	65	1.075 [27.30]	.970 [24.64]	.863 [21.84]	.875 [22.22]	.800 [20.32]	.775 [19.68]

3. PERFORMANCE: MEETS OR EXCEEDS M32139 PERFORMANCE SPECIFICATIONS
CONTACT RATING: 1 AMPERE MAXIMUM
DWV: 250 VAC
INSULATION RESISTANCE: 5000 MEGOHMS MINIMUM @ 100 VDC
CONTACT RESISTANCE: 0.021 VOLT MAXIMUM DROP @ 1.0 AMPS (.021 OHMS)

2. MATERIALS: SHELL: ALUMINUM 6061-T6, ELECTROLESS NICKEL PLATED PER PER AMS2404
INSULATOR: LCP (LIQUID CRYSTAL POLYMER) GLCP-30F
CONTACT: BERYLLIUM COPPER PER ASTM B194, GOLD PLATED PER ASTM B488
LEADS: GOLD LEADS (ROHS COMPLIANT)
EPOXY: 200° CELSIUS

1. MARKINGS: UMI, UMI P/N, DATE CODE & W/O NO. AS SPACE PERMITS OTHERWISE ON BAG OR TAG

NOTES: UNLESS OTHERWISE SPECIFIED

QUALITY SYMBOLS
MAJOR ▼ =
CRITICAL (C) =
SPC (S) =

UNLESS SPECIFIED:
ALL DIMENSIONS IN INCHES
GENERAL TOLERANCES:
3 PLACE ±.005
2 PLACE ±.010
ANGULAR ±2°

Ulti-Mate CAGE CODE
58967

SCALE 5:1
DWG SIZE B
THIRD ANGLE PROJECTION
REVISE ON CAD ONLY
DRAWN BY & DATE UMI 07-30-12
CHECKED BY & DATE SEE ECN
APPROVED BY & DATE SEE ECN
TITLE: NANO-D DUAL ROW CONNECTOR
FEMALE, SIZE XX, CNM26LXX-2S072-S01 HT
MATERIAL: 2
Ulti-Mate Connector Inc.
CAD FILENAME SD-432461327.DWG
PART NO. SEE "TAB BLOCK"
DRAWING NO. SD-432461327
SHEET NO. 1 OF 1
REV –

THIS DRAWING CONTAINS INFORMATION THAT IS PROPRIETARY TO ULTI-MATE INCORPORATED AND SHOULD NOT BE USED WITHOUT WRITTEN PERMISSION.